FILE NAME:

REVISIONS				
ZONE	LTR	DESCRIPTION	DATE	APPROVED
△				
△				

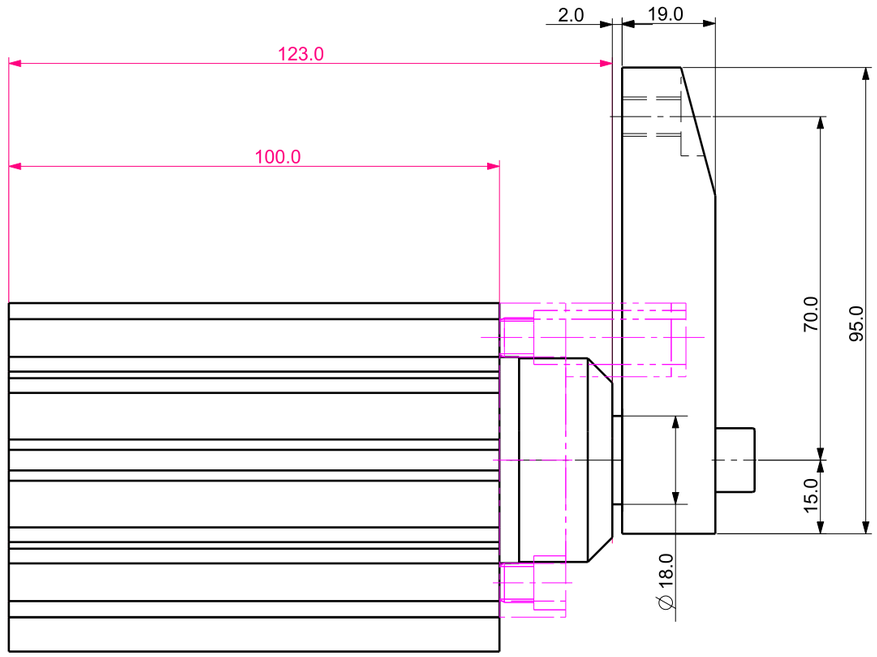

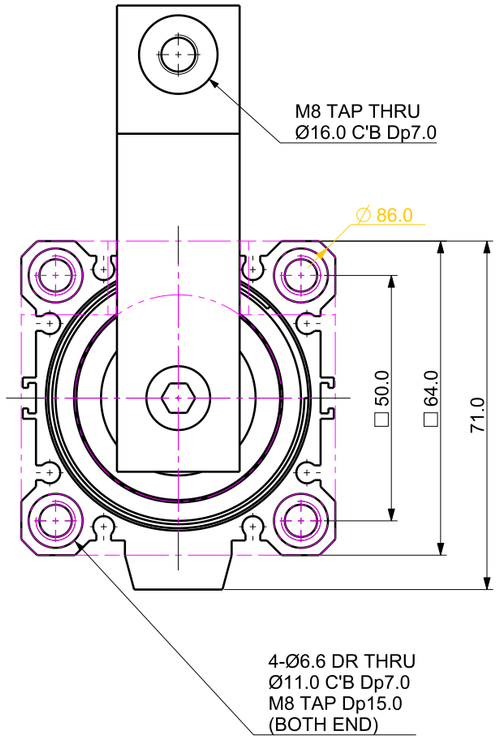

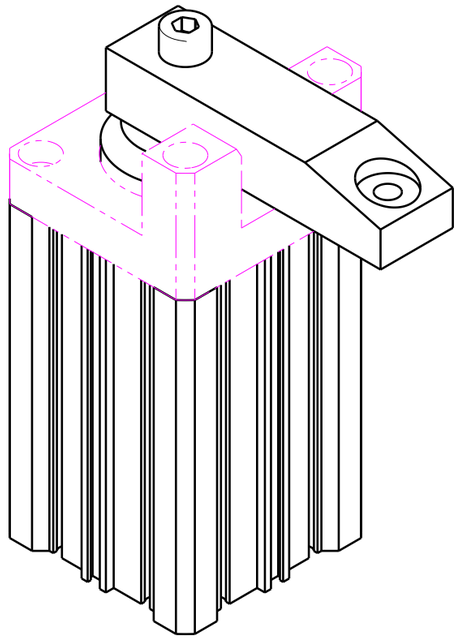

Isometric view (2:3)

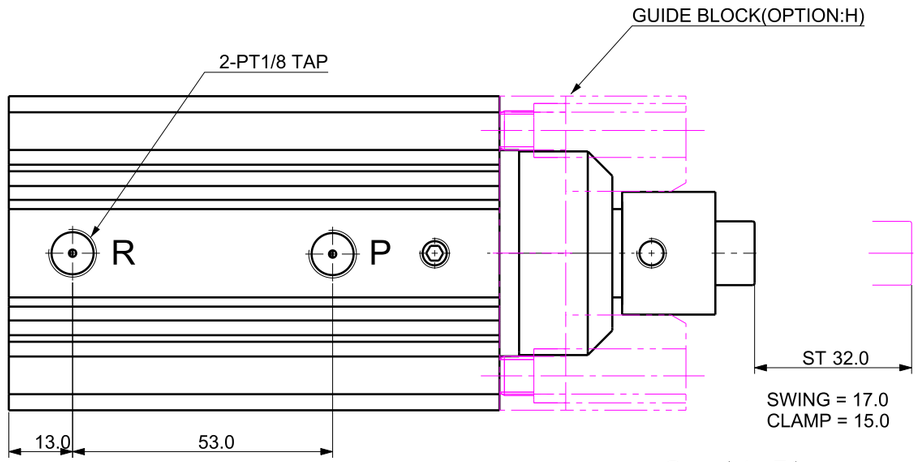

보조 뷰C (4:5)

MODEL : SDx-5032AEH-L

H=GUIDE BLOCK

DET.NO	NAME	Q'TY	MAT'L	FINAL SIZES & PART No	REMARK

UNLESS OTHERWISE SPECIFIED	SIGNATURES	MO-DA-YR
DIMENSIONS ARE IN MM	DRAWN	
ALL SURFACES 6.3S	CHECKED	
TOLERANCES	APPROVED	
ANGLE ±		
X. ±		
.X ± 0.15		
.XX ±		
FINISH	WORK ORDER NO	
HEAT TREAT		

KJF 케이제이에프(주)
TOTAL CLAMPING SYSTEMS

TITLE

AIR SWING CLAMP (GUIDE BLOCK)

REF DWG NO.	DWG NO	
---	SDx-5032AE_F (SDx-5032AEH-L)	A3
SCALE /	TOOL □ PART □	SHEET OF